APPENDIX A

An Electric Model of Nerve

In general, it is legitimate to study a model of a mysterious process if three conditions are fulfilled: 1. Several features of the mystery must be known. 2. The model must contain the absolute minimum of working parts to reproduce the known features. 3. The model must reproduce other features, either as predictions, or as unexpected combinations.

There are several legitimate models of nerve. The earliest ones were simple circuits containing resistance and capacitance, and copied only the passive properties of nerve – they did not propagate an impulse or even suggest how an impulse would be propagated. They had the advantage of drawing attention to the similarity of a nerve to a leaky cable such as a submarine telegraph line. Since the mathematical equations relating to leaky cables were worked out during the last century, physiologists could apply rigorous and well-tested notions to those passive features of nerve which the 'leaky cable' models reproduced. Later, electrochemical models were discovered. The best known of these is, incongruously enough, an iron wire in strong nitric acid. The acid forms an oxide film on the wire so that the iron within does not dissolve. This film is 'passive' but breaks down when scratched or stimulated electrically, for example, when the wire is touched with a piece of zinc. When the wire is stimulated, an impulse passes quite quickly down it, and this impulse has many of the properties of a nerve impulse: it is a vortex ring of electrochemical action. During the passage of the impulse the passive film is decomposed momentarily, and the nitric acid attacks the iron with the evolution of nitric oxide. A fresh passive film is formed and this is 'refractory' for a short time; the wire cannot propagate another impulse immediately

after one has passed by. This is a good dynamic model but has the disadvantage that the nature of the passive film is almost as mysterious as the nerve fibre itself; it is not very satisfactory to equate two unknowns.

It is possible to retain the simplicity of the leaky cable models and add to them a dynamic element to represent the mechanism in a nerve which provides the miniature electrochemical explo-

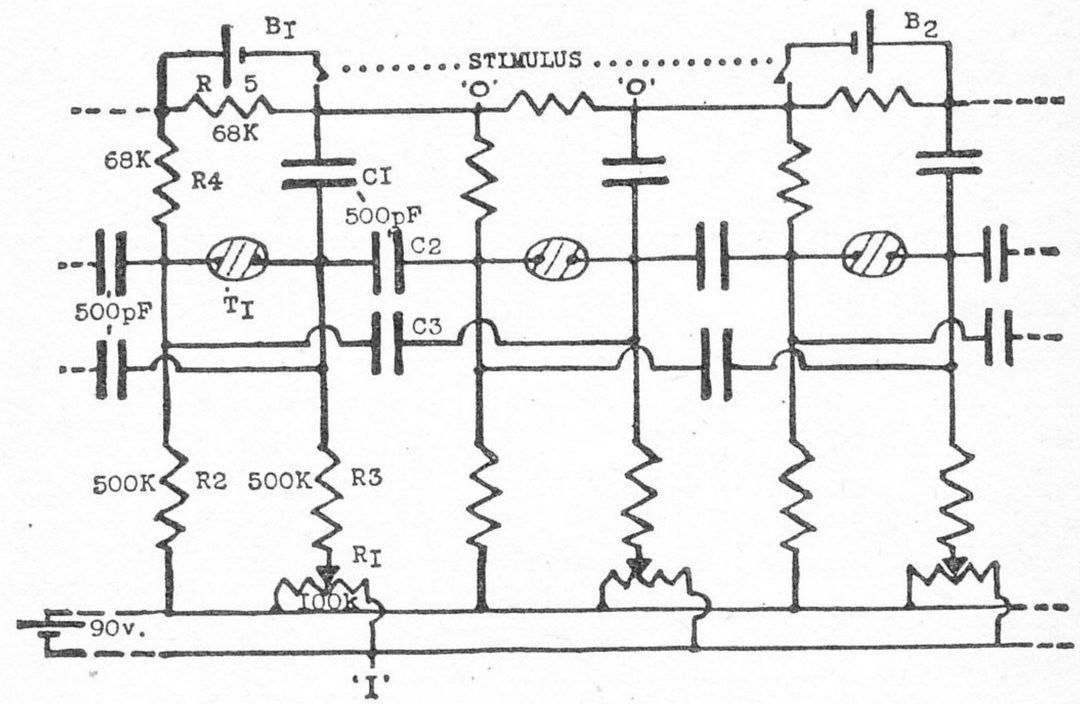

Figure 18. Circuit of Model Nerve

sion seen as an impulse. The circuit of a working model is shown in Figure 18. The capacitors and resistors provide the elements of a leaky cable, and the battery maintains a steady voltage such that the 'inside' of the model is negative to the outside. The addition to the circuit which endows it with the power to propagate an impulse is the neon tube, also connected, in effect, between the inside and outside and biased to a few volts below its striking voltage, which, in the case of the miniature tubes used for the embodiment of this circuit, is between fifty and sixty volts. Every element (consisting of resistors R_1,

R_2, R_3, R_4, the neon tube, and the capacitor C) is connected to the adjacent elements on both sides through the capacitors C_2, C_3 and C_4, C_5. These capacitors join points of opposite polarity of the neon tubes, so that they may be envisaged as being in the form of a criss-cross connexion, a sort of lazy-tongs arrangement extending down the chain of elements.

Providing all the neon tubes are below their striking voltage, the system is stable and inert. If, however, a voltage is applied as indicated by the external battery B_1 or B_2, the voltage across one of the neon tubes rises, and when it reaches the striking threshold the tube ionizes and partially discharges the capacitor C_1. When the tube ionizes the voltage across it drops to the extinction level. This voltage drop is applied to adjacent tubes through C_2, C_3 and C_4, C_5, in such a sense as to *increase* the voltage across them (owing to the criss-cross connexion) and they accordingly strike in their turn. The impulse is thus propagated to both ends of the chain at a velocity depending on the values of the capacitors and resistors.

In the working model which has the values shown in the figure the conduction time is about 0·2 m. sec. for an element. The action potential has a duration of about 10 m. sec. – rather longer than most nerves; the absolutely refractory period is about 5 m. sec. and the relatively refractory period about 15 m. sec. Twenty such elements represent five to ten centimetres of frog motor nerve at about 10°C. The action potential, excitability characteristics, chronaxie, accommodation, space constant, and so forth, have values which are interrelated in much the same way as in a nerve. The size and effectiveness of the impulse at any point depend only on the state of the element at that point, so that propagation is decrement-less and all-or-none.

A synapse may be formed by omitting one of the capacitors such as C_2 or C_3. If then the threshold of the element on one side of the half-break is raised by lowering the bias voltage it can be stimulated by an impulse arriving from the unchanged side and can just stimulate on the other side through the single capacitor; it cannot, however, be stimulated through the single capacitor. Propagation is therefore unidirectional and is then

found to be frequency-sensitive. Very low and very high rates of stimulation are relatively ineffective and there is a fairly marked optimum range of stimulation rate. This implies facilitation; two impulses may be effective when one is not. A junction between several such chains exhibits all the properties of simple reflex systems, such as recruitment and occlusion.

Inhibition may also be demonstrated. Wedensky inhibition is seen when the threshold of one element in a continuous chain is raised. A low-frequency train of impulses will pass this depressed element, but a high-frequency one will not. An inhibitory synapse is made by connecting a single capacitor from the positive side of one element to the positive side of another. A train of impulses in the 'pre-synaptic' stretch then inhibits a spontaneous discharge on the other side of the inhibitory link; the degree of inhibition is a function of the frequency of the impulses in the pre-synaptic stretch.

Spontaneous activity is easily produced by raising the bias voltage of one tube so that it regularly strikes and discharges its condenser, which then charges up again, and so forth, as in the simplest relaxation oscillator circuit. The top limit of spontaneous discharge frequency is fixed by the absolutely refractory period and in the actual model is about 200 impulses per second.

Altogether the model seems to display eighteen or so of the known properties of nervous and synaptic excitation and propagation. Many of these properties were not foreseen as following inevitably from the elementary features originally specified as imitable. For instance, an inhibitory end-organ can be connected to one end of the chain and an inhibitory synapse arranged in the middle of it. This is achieved by connecting the anode of a photo-cell through a capacitor to the positive side of the first element of the pre-synaptic chain. With this arrangement, when light falls on the photo-cell its anode becomes more negative and transiently decreases the excitability of the element to which it is connected. The adaptation rate is governed by the time-constant of the coupling capacitor and resistors. Now, if the post-synaptic stretch is set to discharge at a moderate rate, and the pre-synaptic stretch at a high rate,

the activity of the latter will partially inhibit that of the former. When a light is shone on the photo-cell, the pre-synaptic discharge will be inhibited, but in consequence the post-synaptic activity will be *dis*-charged. Further, if in identical conditions the photo-cell is illuminated by a *flickering* light, at a moderate rate of flicker, inhibition at the end-organ is converted into excitation; the system responds with a rebound at the *end* of each flash. Accordingly, with flicker, the discharge rate in the pre-synaptic chain is augmented instead of being reduced by steady light, and the post-synaptic activity is still further inhibited instead of being dis-inhibited.

Effects such as this are in fact seen in the central nervous system; a change in stimulus frequency has often been found to invert the response, and the anomalous effects of flicker have been described in some detail. It may well be that these otherwise rather puzzling phenomena may be explicable in terms of the peculiar properties of rapidly adapting inhibitory synapses, displayed so clearly in this simple model. The fact that this model is affected by and produces electrical rather than chemical or mechanical changes should be regarded as a convenience and a coincidence. It is not, of course, proof that the electrical changes in nerve are the essence of nervous action. The model is simply the analogue of one set of familiar mathematical expressions relating to passive networks linked by a non-linear operator in the form of a discharge tube. It could quite well be formed of chemical or mechanical parts and does not in theory contain more information than do the algebraic equations. Its advantage is that, being a real object, it has constant dimensions; hence its predictions are more explicit and detailed than those of the equations in which the constants are rather more arbitrary and independent.